LOBERON
COMING HOME

15 min

2
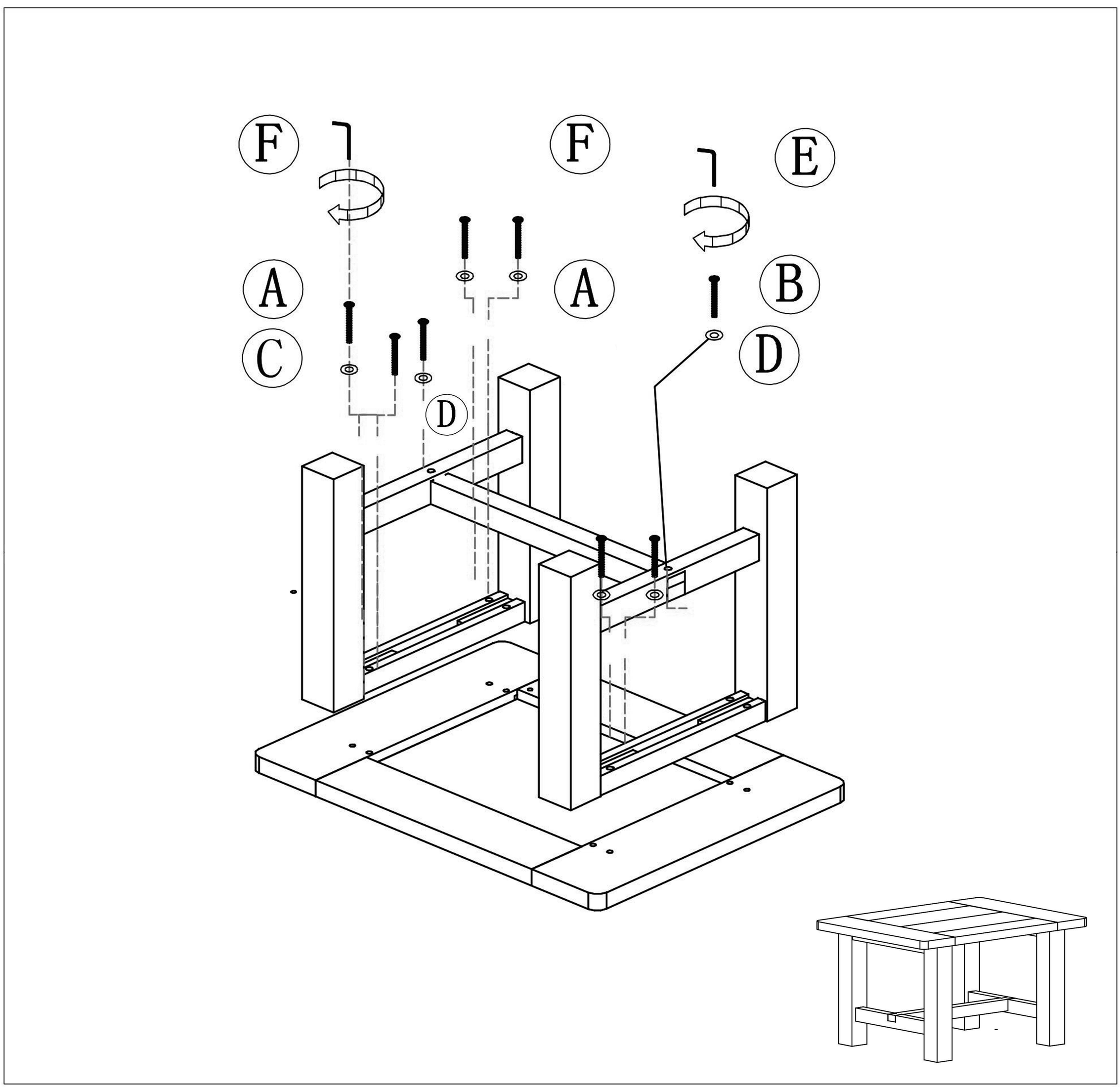
| A x 8 | B x 2 | C x 8 | D x 2 | E x 1 | F x 1 |
|---|---|---|---|---|---|
| 10x55mm | 8x50mm | 10x18mm | 8x22mm | M6 | M8 |