LOBERON
COMING HOME

15 min

2

AX3	BX3	CX6	DX1	EX3	FX3	GX3	HX1	KX3
Ø8X75mm	Ø8X55mm	Ø8X22mm	M8	8X100mm		Ø8		8X30mm

1

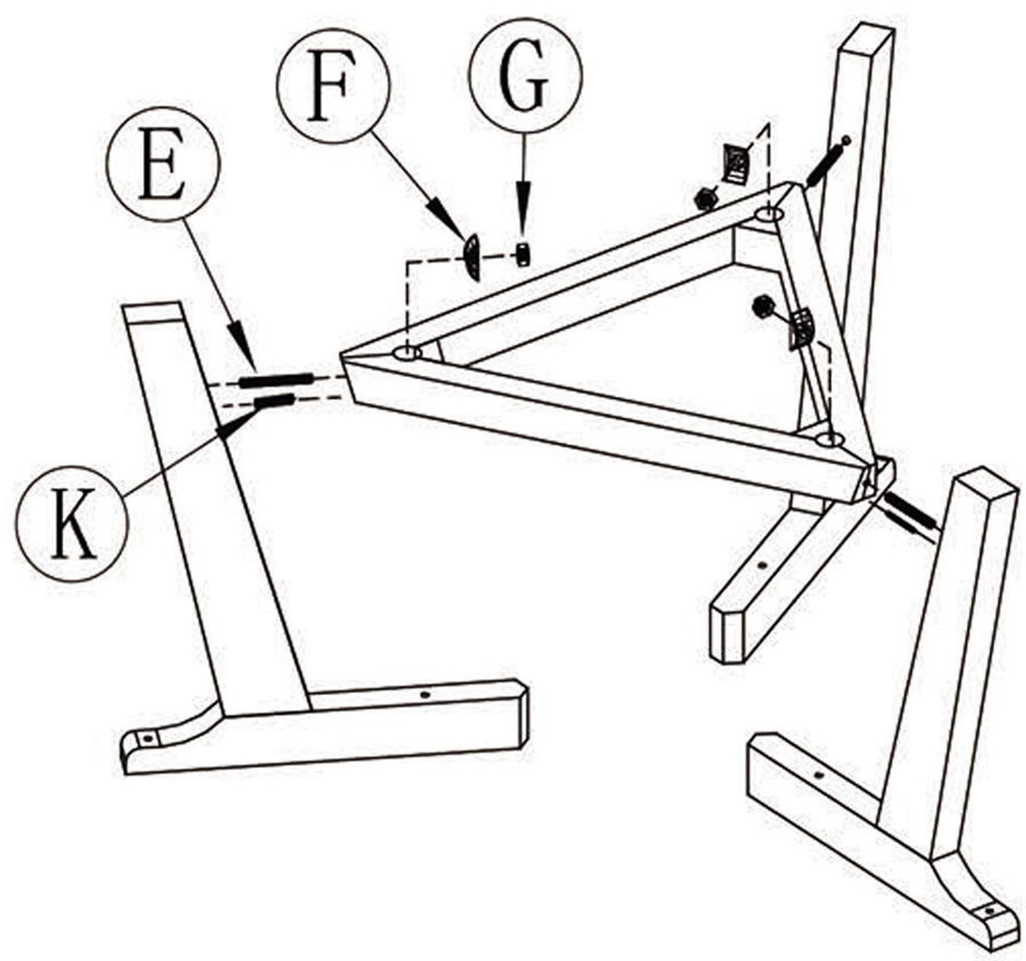
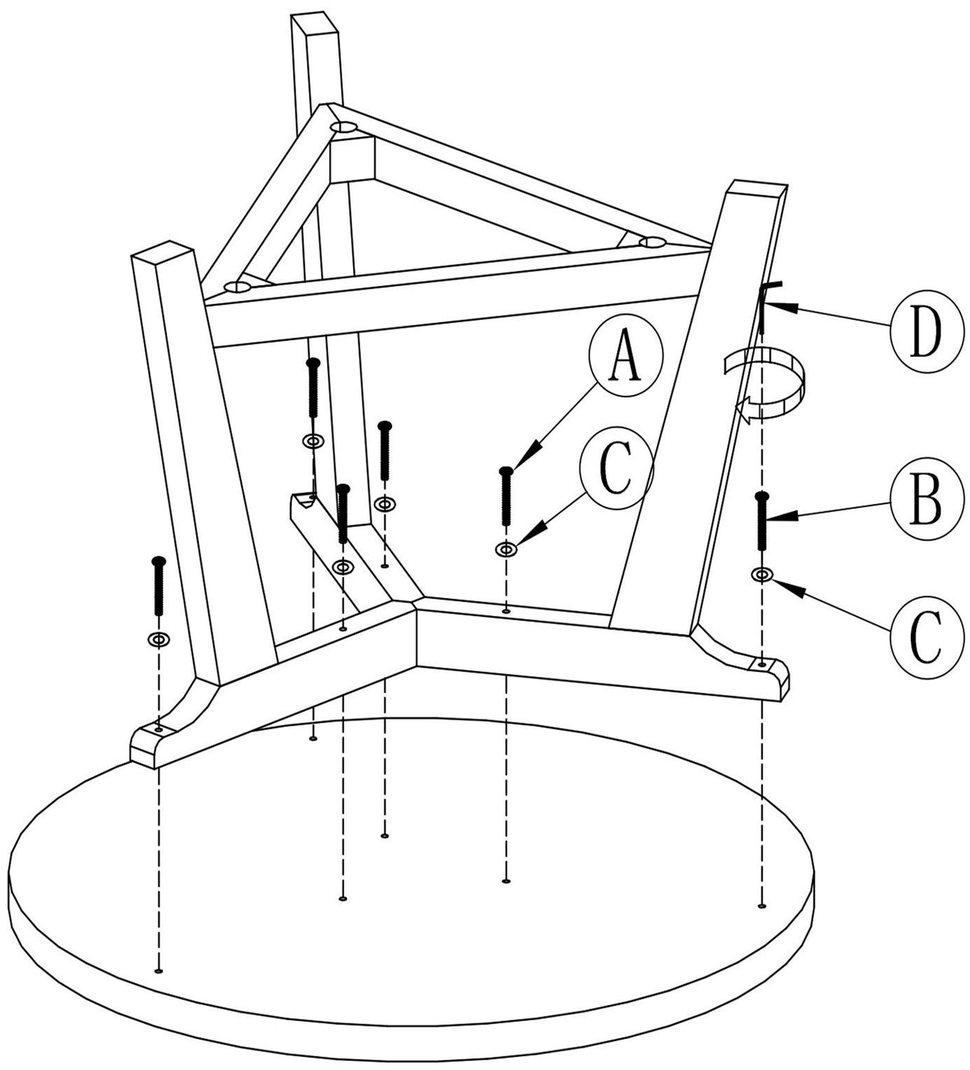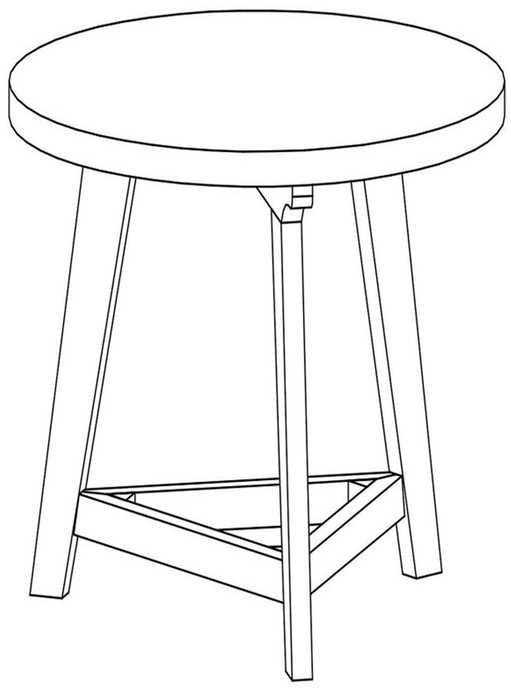
2